American Electrical, Inc.

Industrial Electrical Accessories

425 Southlake Blvd. • Suite 9-B • Richmond, VA 23236 • (804) 379-2899 • Fax: (804) 379-8935

Ground Tension Clamp Terminal Blocks

WY 4 T

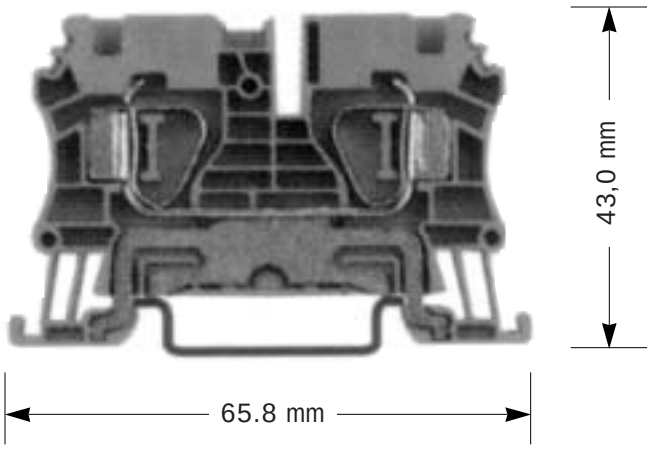

Description	AEI Part No.	Volts V	Amps A	Wire Size AWG	Thickness mm
WY 4 T Ground Tension Clamp Terminal Block	336130	—	—	26 ... 10	6.0
WY 4 T End Plate	446132				1.2